245 SL
2" Stationary Louver

Application:
High flow - thru design with low pressure drop and high free area.
Aluminum construction for high resistance to corrosion
Hidden mullion allows for continuous blade appearance.

Material:
6063-T5 .081" aluminum frame
6063-T5 .081" aluminum blades

Sizes:
Minimum size: 12" x 12"
Maximum section: 144" x 96"
Sections can be field assembled to Construct larger sizes.

Construction:
.081" Thick aluminum blades positioned at 45 angle and spaced approximately 2.5" center to center

Features:
56% Free Area @ 48" X 48" back blade full open
Solid frame construction
All aluminum construction
Outstanding durability
Low maintenance
Easily removable screens

Options:
Pneumatic or electric actuators
High Wind load bracing
Bird Screen
Insect screen

Finishes:
Mill Finish
Clear Anodize
Prime Coat
Baked Enamel Finish
Kynar
Color Anodizing

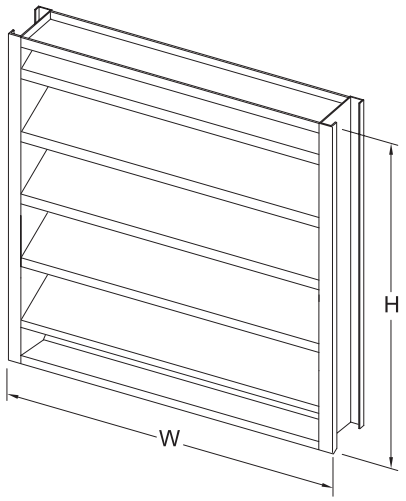

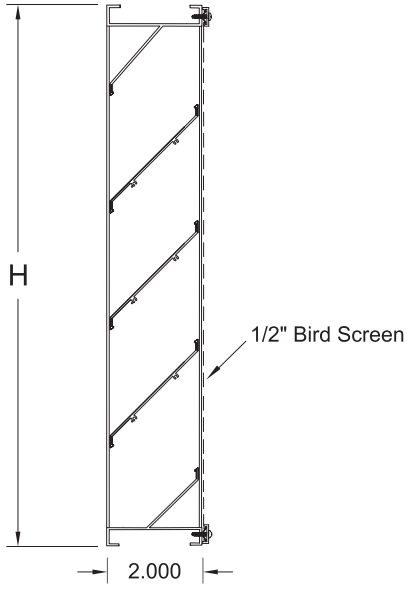

REPRESENTATIVE:	**CONTRACTOR:**
ARCHITECTURAL	**LOCATION**
ENGINEER	**PROJECT**
	DATE

13550 Pumice St. Norwalk, California 800) 960-0242, 562) 921-9839 Fax